LONG SEAMS	
COURSE	ORIENTATION
1(TOP)	15°
2	195°

*VERT – TOP TO BOTTOM

Ship loose items:
(2 PCs.) HANDRAIL W/ HARDWARE
(1 PC.) LADDER W/ HARDWARE
(2 PCs.) PLATFORM W/ HARDWARE
(1 PC.) A71-24 (GALV.) SWING GATE

Fall arrest system:
(1) Top & Bottom Bracket (PART# 6116631)
(1) Cable guide (PART# 6100400)
(1) 25' Cable (PART# 6104025)

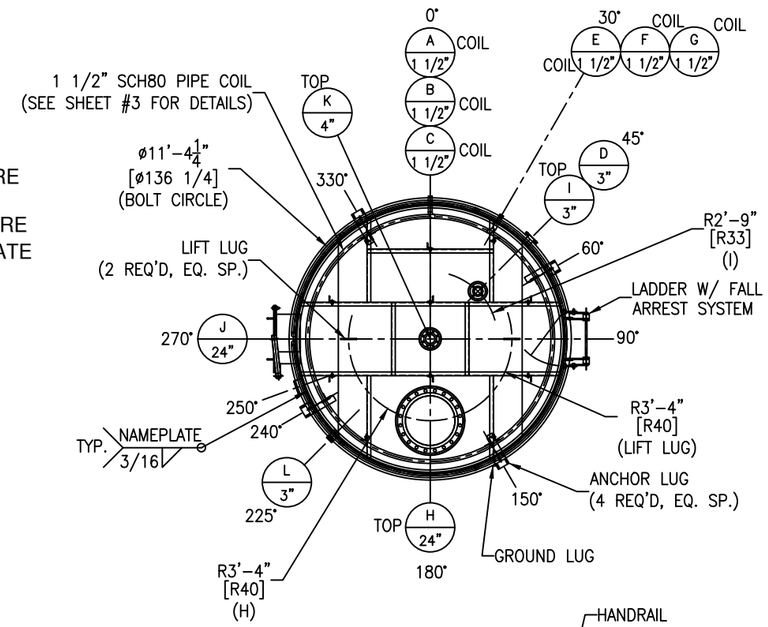

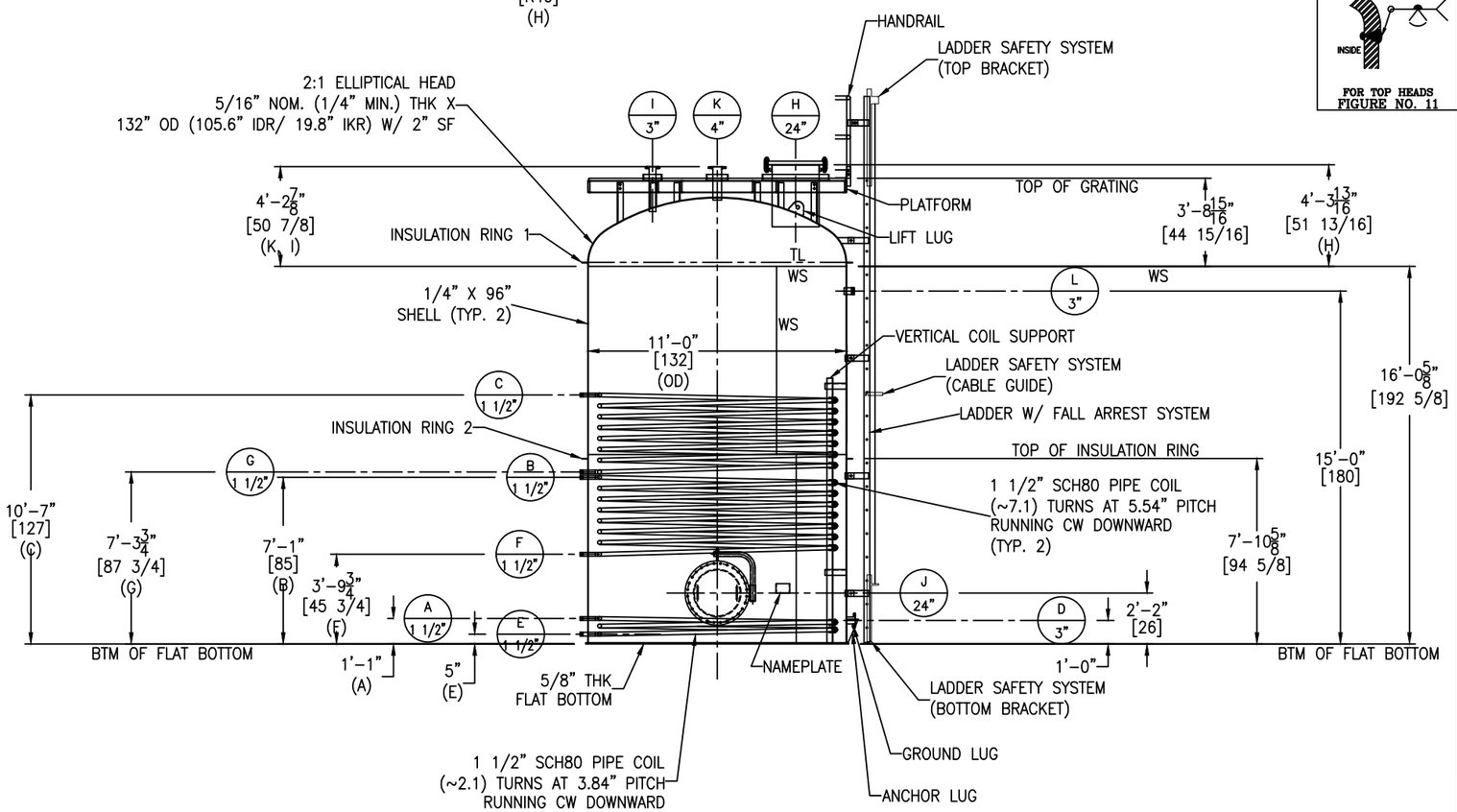

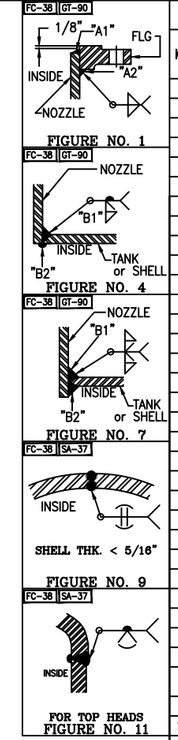

NOZZLE SCHEDULE

MARK	SERVICE	SIZE	RATING	TYPE / STYLE	NECK SCHED.	PROJECTION EXT. (℄)	PROJECTION INT. (MIN.)	WELD FIGURE	REPAD SIZE (WIDTH X THK.)	WELD SIZE "A1"	"A2"	"B1"	"B2"	"C1"	"C2"
A	COIL 1 INLET	1 1/2"	–	TOE PIPE W/ELBOW	80	4"	SEE DWG	7	–	–	–	1/4	1/4	–	–
B	COIL 2 INLET	1 1/2"	–	TOE PIPE W/ELBOW	80	4"	SEE DWG	7	–	–	–	1/4	1/4	–	–
C	COIL 3 INLET	1 1/2"	–	TOE PIPE W/ELBOW	80	4"	SEE DWG	7	–	–	–	1/4	1/4	–	–
D	EFFLUENT	3"	150#	RFSO	80	4 1/2"	–	1,4	–	5/16	5/16	1/4	1/8	–	–
E	COIL 1 OUTLET	1 1/2"	–	TOE PIPE W/ELBOW	80	4"	SEE DWG	7	–	–	–	1/4	1/4	–	–
F	COIL 2 OUTLET	1 1/2"	–	TOE PIPE W/ELBOW	80	4"	SEE DWG	7	–	–	–	1/4	1/4	–	–
G	COIL 3 OUTLET	1 1/2"	–	TOE PIPE W/ELBOW	80	4"	SEE DWG	7	–	–	–	1/4	1/4	–	–
H	ROOF MANWAY	24"	150#	RFSO W/BLIND	3/8"	SEE DWG	1"	1,7	–	3/8	3/8	5/16	1/8	–	–
I	FILL INLET	3"	150#	RFSO	80	SEE DWG	1"	1,7	–	5/16	5/16	1/4	1/8	–	–
J	SHELL MANWAY	24"	–	API W/DAVIT	3/8"	10"	1"	7	–	–	–	1/4	1/8	–	–
K	VENT	4"	150#	RFSO	80	SEE DWG	1"	1,7	–	5/16	5/16	5/16	1/8	–	–
L	OVERFLOW	3"	–	TOE PIPE	80	4"	1"	7	–	–	–	1/4	1/4	–	–

MATERIALS OF CONSTRUCTION

	VESSEL
SHELL	SA36
HEADS	SA516-70
FLAT BOTTOM	SA36
NOZZLE NECKS	SA53-B ERW
NOZZLE FLANGES	SA105
MANWAY NECKS	SA36
MANWAY FLANGES	SA36
GASKETS	KLINGER
BOLTS/STUDS	SA193-B7 (ZINC PLATED)
NUTS	SA194-2H (ZINC PLATED)
REPADS	–
COUPLINGS	–
SUPPORTS/HOLD DOWNS	SA36
LIFTING LUGS	SA36
VACUUM RINGS	–
INSULATION RINGS	SA36
GROUND LUG	SA36
BAFFLE	–
LADDER	SA36
TANK CLIPS (LADDER)	SA36
HANDRAIL	SA500
HANDRAIL CLIPS	SA36
PLATFORM	SA36
PLATFORM CLIPS	SA36
DIPTUBE SUPPORT	–
COIL SUPPORT U-BOLTS	CS
COIL SUPPORTS	SA36
COIL NOZZLE NECKS	SA53-B ERW & SA234 WPB
COIL NOZZLE FLANGES	SA105

DESIGN DATA

	VESSEL
DESIGN AND FAB. CODE	API650 (AS APPLICABLE)
CERT. STAMP REQ'D.	NO
DESIGN PRESSURE	ATM
DESIGN TEMPERATURE	315° F
MIN. DESIGN METAL TEMP.	30° F @ ATM
OPERATING PRESSURE	ATM
OPERATING TEMPERATURE	300° F
JOINT EFFICIENCY HEADS	0.70
JOINT EFFICIENCY SHELL	0.70
CORROSION ALLOWANCE	0"
SPECIFIC GRAVITY	1.78
EARTHQUAKE ZONE	Ss = (0.180) S1 = (0.043)
WIND LOAD	113 MPH
STRESS RELIEF	NOT REQ'D
RADIOGRAPHIC EXAM	NOT REQ'D
DYE PENETRANT EXAM	NOT REQ'D
MAGNETIC PARTICLE EXAM	NOT REQ'D
HYDROSTATIC TEST	NOT REQ'D
PNEUMATIC TEST	2 PSIG / GAUGE #1
COIL DESIGN AND FAB. CODE	ASME
COIL CERT. STAMP REQ'D.	YES
COIL DESIGN PRESSURE	75 PSIG
COIL DESIGN TEMPERATURE	300° F
COIL MIN. DESIGN METAL TEMP.	30° F @ 75 PSIG
COIL OPERATING PRESSURE	–
COIL OPERATING TEMPERATURE	–
COIL JOINT EFFICIENCY HEADS	–
COIL JOINT EFFICIENCY SHELL	–
COIL HYDRO TEST	98 PSIG / GAUGE #9

VESSEL FINISH

INTERIOR WELD TREATMENT:	SAV TANK STANDARD
EXTERIOR WELD TREATMENT:	SAV TANK STANDARD
SAV TANK FINISHING STANDARD:	N/A
INSULATION:	3" BY OTHERS
PAINTING:	SEE NOTE 6
GALVANIZING	SEE NOTE 7

VESSEL CAPACITY AND WEIGHTS

OPERATING CAPACITY	–
FULL CAPACITY	12,600 GAL.
EMPTY SHIPPING WEIGHT W/O ACCESSORIES	14,100 LBS.
WEIGHT FULL OF WATER	122,500 LBS.
WEIGHT FULL OF PRODUCT	205,000 LBS.
WEIGHT OF ACCESSORIES	2,500 LBS.

QUALITY CONTROL

ENG. _____ DATE: _____

Q.C. _____ DATE: _____

This drawing is issued for customer approval. please review, make approval changes (if any) in red. check the appropriate box, sign & date.

- ☐ Approval – no changes. Please proceed with fabrication.
- ☐ Approved as noted. Please proceed with fabrication
- ☐ Not approved. Please make changes and resubmit.

Customer signature _____ Date _____

GENERAL NOTES

1.) COVER ALL FLANGES, OPENINGS & MACHINED SURFACES PRIOR TO SHIPMENT UNLESS OTHERWISE NOTED.
2.) BOLT HOLES TO STRADDLE 0° & 180° UNLESS OTHERWISE NOTED.
3.) NOZZLE REPADS TO HAVE (1) ø1/4" TELL-TALE HOLES ON HORIZONTAL CENTER LINE. ALL OTHER REPADS TO HAVE (1) ø1/4" WEEP HOLE AT LOWEST POINT ON PAD.
4.) MANUFACTURING TOLERANCE TO BE IN ACCORDANCE WITH API STANDARD 650 7.5.
5.) ASME MATERIALS TO CONFORM TO THE FOLLOWING: FLANGES – B16.5, FITTINGS – B16.9 & COUPLINGS – B16.11.
6.) PAINTING – SANDBLAST SP6. & (1) COAT CARBOZINC @ 4–5 MILS DFT PAINT.
7.) GALVANIZING – HANDRAILS, LADDERS AND PLATFORM TO BE HOT DIPPED GALVANIZED.

REVISIONS

REV	D.BY	C.BY	DATE	DESCRIPTION
				AS BUILT
4	RS	NP	11/4/25	CERTIFIED
3	AD	RS	10/29/25	APPROVAL REV 3
2	AD	RS	10/17/25	APPROVAL REV 2
1	RS	AD	8/14/25	APPROVAL REV 1
0	AD	RS	7/28/25	APPROVAL

Savannah Tank & Equipment Corp.
1517 Telfair Road, Savannah, GA 31415
(912) 233-8902

DRAWN BY: AD
CHK'D BY: RS
APPROVED BY: NP
SCALE: 1/4" = 1'-0"

ATLAS MINERALS & CHEMICALS
SULFUR HOLDING TANK
EQUIP. #
CUST. PO # 106053

DRAWING NO.: 084-25-1 SHT 1 OF 7 REV. SET 4

FC-38

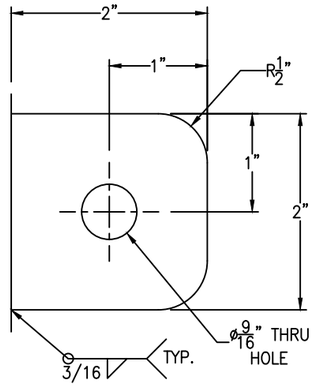

GROUND LUG IS LOCATED @ 150°

GROUND LUG DETAIL

SCALE: 1'-0" = 1'-0"

FC-38

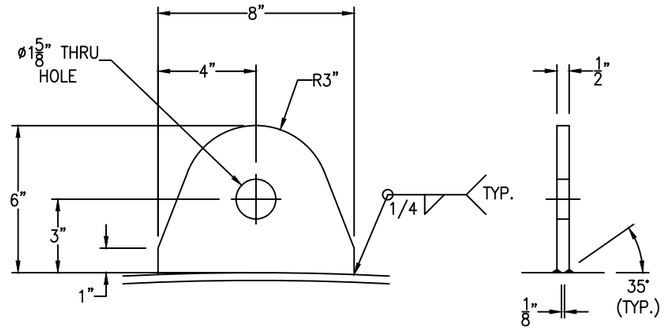

TANK WT. <= 20000#

SHACKLE PIN DIA. = 1 1/2"

LIFT LUG DETAIL

(2 REQ'D) SCALE: 3" = 1'-0"

FC-38

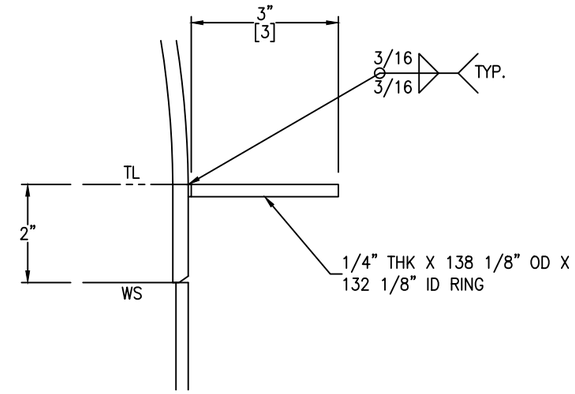

INSULATION RING 1 DETAIL

(1 REQ'D) SCALE: 6" = 1'-0"

FC-38

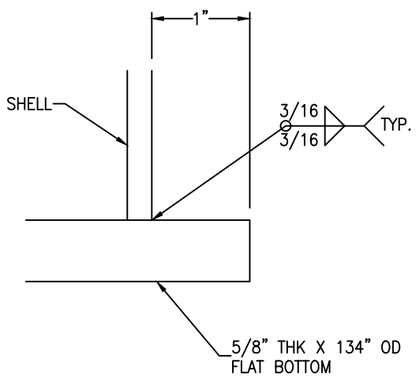

FLAT BOTTOM DETAIL

SCALE: 1'-0" = 1'-0"

FC-38

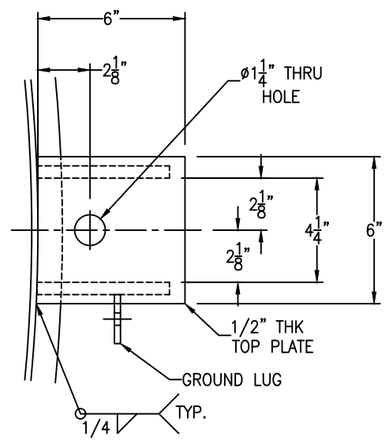

FC-38

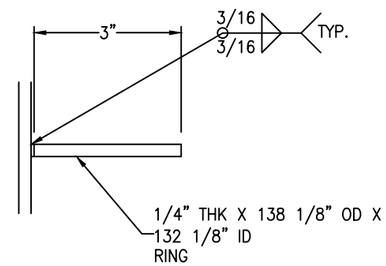

(SEE SHEET #1 FOR ELEVATION)

INSULATION RING 2 DETAIL

(1 REQ'D) SCALE: 6" = 1'-0"

Bolting for blinds
H: (20) 1 1/4"-7 NC x 7 1/2" FULL THREADED STUD
(40) 1 1/4"-7 NC HH NUT
(1) 24" 150# RING GASKET X 1/8" THK (KLINGER)

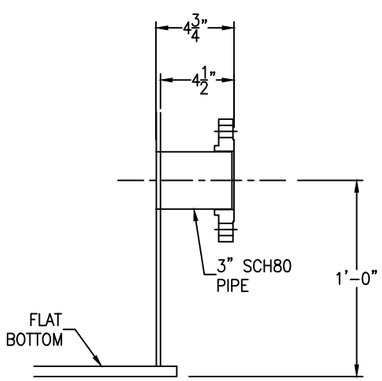

NOZZLE D DETAIL

SCALE: 2" = 1'-0"

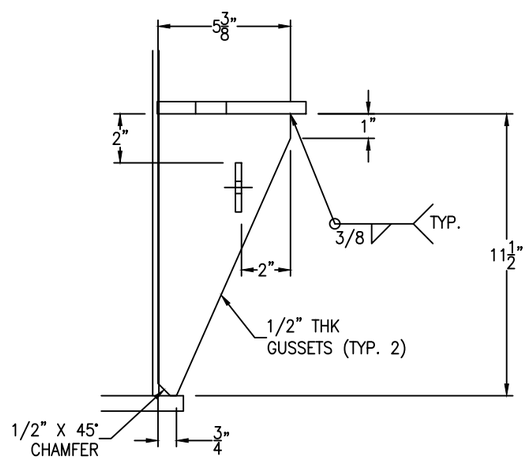

ANCHOR LUG DETAIL

(4 REQ'D) SCALE: 3" = 1'-0"

REV	D.BY	C.BY	DATE	DESCRIPTION
				AS BUILT
4	RS	NP	11/4/25	CERTIFIED
3	AD	RS	10/29/25	APPROVAL REV 3
2	AD	RS	10/17/25	APPROVAL REV 2
1	RS	AD	8/14/25	APPROVAL REV 1
0	AD	RS	7/28/25	APPROVAL

⚠ REVISIONS

Savannah Tank & Equipment Corp.
1517 Telfair Road, Savannah, GA 31415
(912) 233-8902

DRAWN BY: AD
CHK'D BY: RS
APPROVED BY: NP
SCALE: 1/4" = 1'-0"

ATLAS MINERALS & CHEMICALS
SULFUR HOLDING TANK
EQUIP. #
CUST. PO # 106053

DRAWING NO.: 084-25-2 SHT 2 OF 7 REV. SET 4

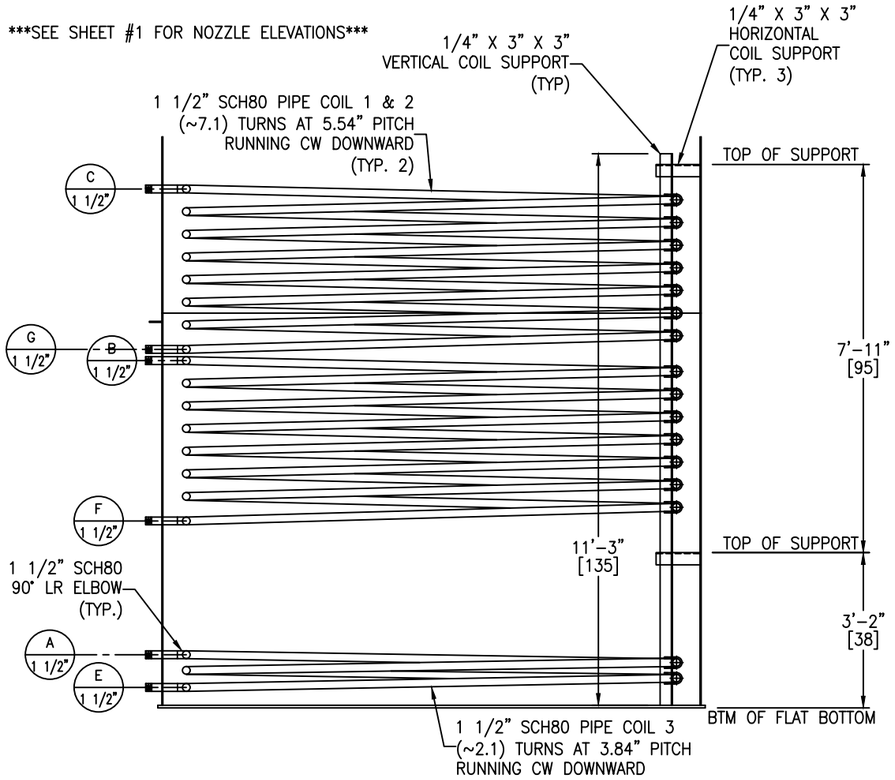

INTERNAL COIL ELEVATION VIEW DETAIL

SCALE: 1/2" = 1'-0"

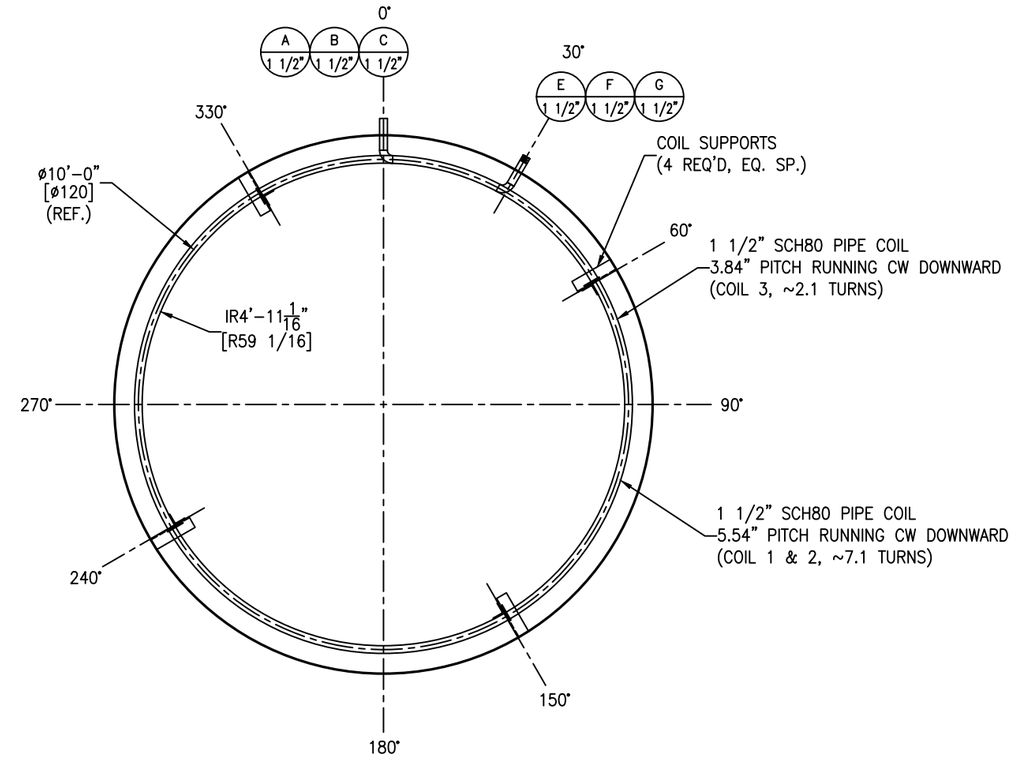

INTERNAL COIL PLAN VIEW DETAIL

SCALE: 1/2" = 1'-0"

FC-38

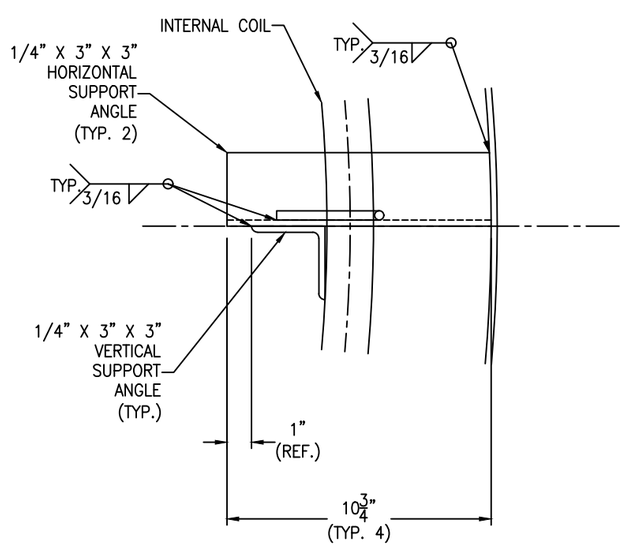

COIL SUPPORT DETAIL

(4 REQ'D) SCALE: 3" = 1'-0"

FC-38

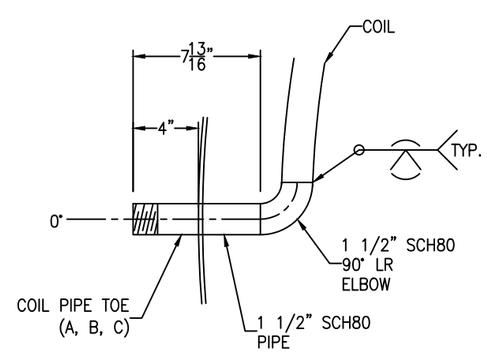

COIL INLET NOZZLE DETAIL

(3 REQ'D) SCALE: 2" = 1'-0"

FC-38

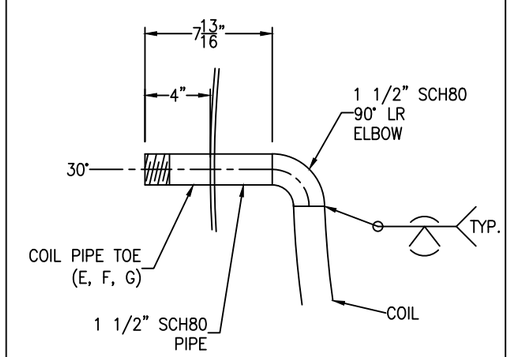

COIL OUTLET NOZZLE DETAIL

(3 REQ'D) SCALE: 2" = 1'-0"

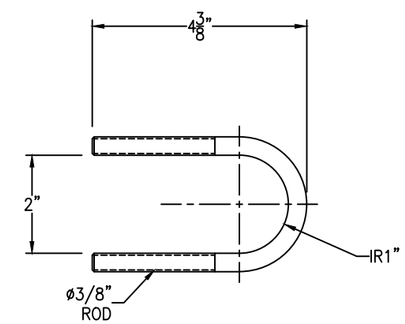

U-BOLT DETAIL

(70 REQ'D) SCALE: 6" = 1'-0"

REV	D.BY	C.BY	DATE	DESCRIPTION
				AS BUILT
4	RS	NP	11/4/25	CERTIFIED
3	AD	RS	10/29/25	APPROVAL REV 3
2	AD	RS	10/17/25	APPROVAL REV 2
1	RS	AD	8/14/25	APPROVAL REV 1
0	AD	RS	7/28/25	APPROVAL

⚠ REVISIONS

Savannah Tank & Equipment Corp.
1517 Telfair Road, Savannah, GA 31415
(912) 233-8902

DRAWN BY: AD
CHK'D BY: RS
APPROVED BY: NP
SCALE: 1/4" = 1'-0"

ATLAS MINERALS & CHEMICALS
SULFUR HOLDING TANK
EQUIP. #
CUST. PO # 106053

DRAWING NO.: 084-25-3 SHT 3 OF 7 REV. SET 4

FC-38

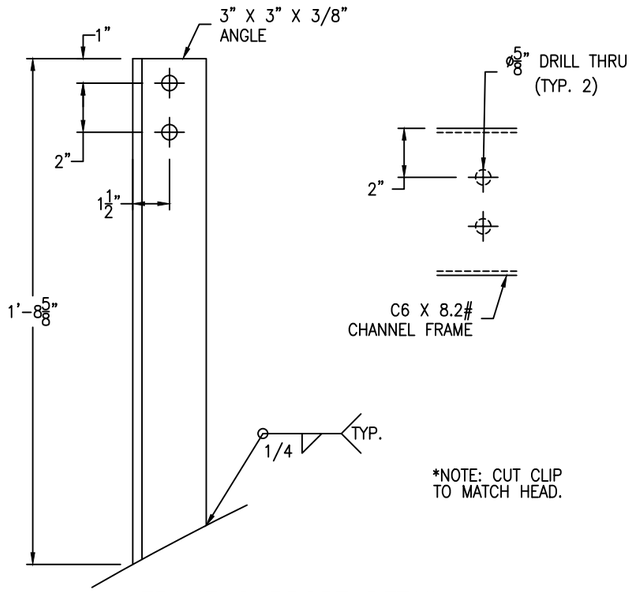

FRAME SUPPORT DETAIL

(11 REQ'D) SCALE: 3" = 1'-0"

GM-73

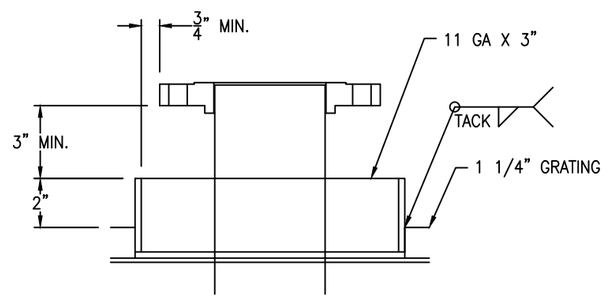

NOZZLE CUTOUT DETAIL

(3 REQ'D) SCALE: 3" = 1'-0"

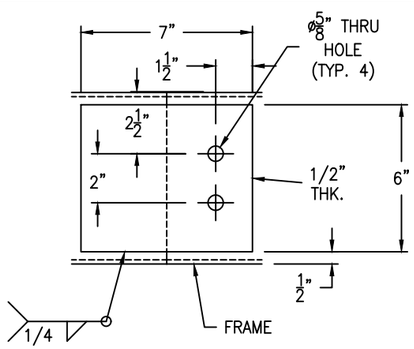

SPLIT PLATFORM FROM 90° & 270°.

FRAME SPLIT CONNECTION DETAIL

(4 REQ'D) SCALE: 3" = 1'-0"

GM-73

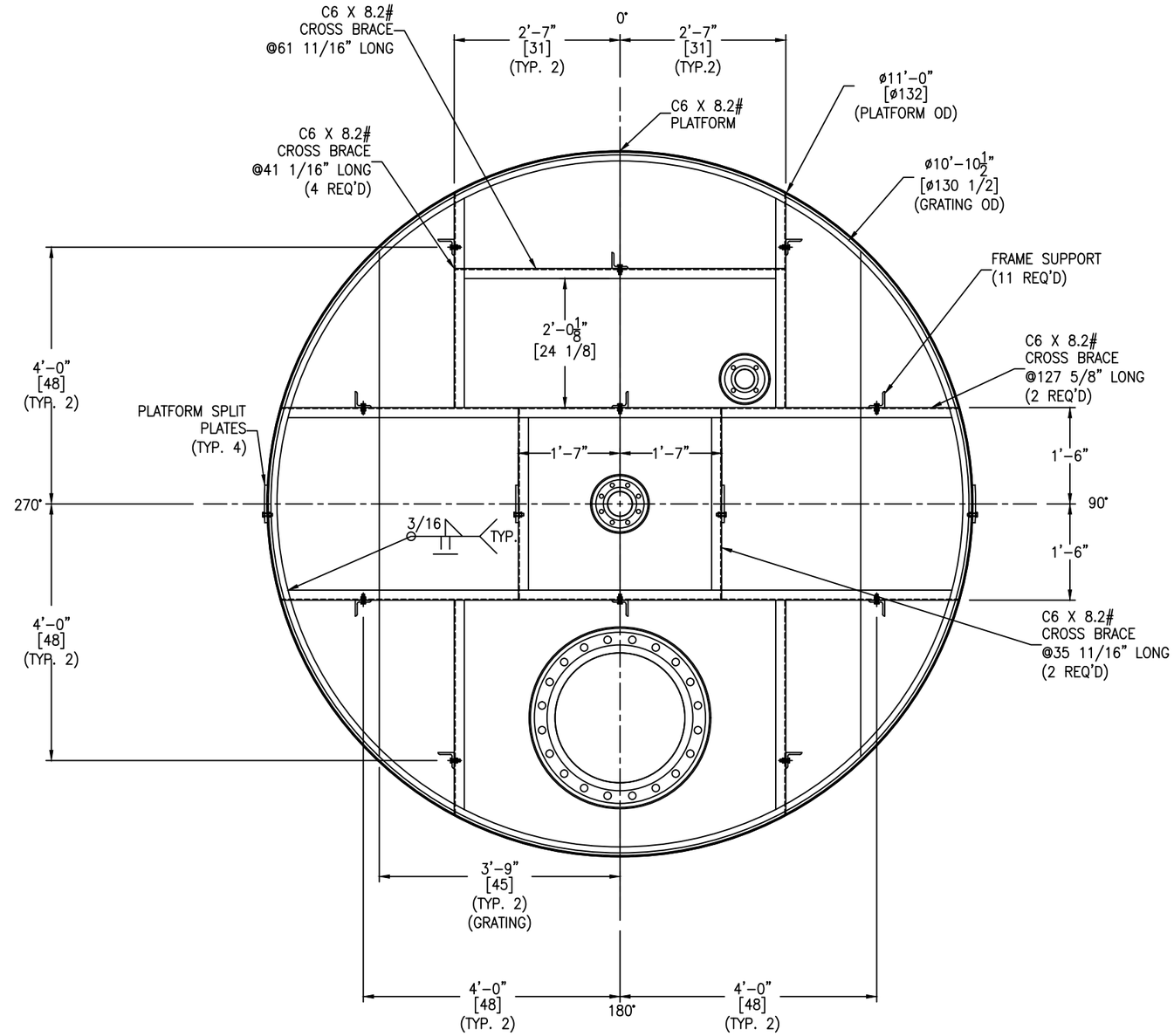

PLATFORM DETAIL

SCALE: 3/4" = 1'-0"

FRAME SUPPORT BOLTING:
(22) 1/2-13 NC X 2" HH BOLT - SA193-B7 (ZINC PLATED)
(22) 1/2-13 NC HH NUT - SA194-2H (ZINC PLATED)

FRAME SPLIT BOLTING:
(8) 1/2-13 NC X 2" HH BOLT - SA193-B7 (ZINC PLATED)
(8) 1/2-13 NC HH NUT - SA194-2H (ZINC PLATED)

PLATFORM & GRATING TO BE HOT-DIPPED GALVANIZED

REV	D.BY	C.BY	DATE	DESCRIPTION
				AS BUILT
4	RS	NP	11/4/25	CERTIFIED
3	AD	RS	10/29/25	APPROVAL REV 3
2	-	-	-	-
1	-	-	-	-
0	-	-	-	-

⚠ REVISIONS

Savannah Tank & Equipment Corp.
1517 Telfair Road, Savannah, GA 31415
(912) 233-8902

DRAWN BY: AD
CHK'D BY: RS
APPROVED BY: NP
SCALE: 3/8" = 1'-0"

ATLAS MINERALS & CHEMICALS
SULFUR HOLDING TANK
EQUIP. #
CUST. PO # 106053

DRAWING NO.: 084-25-4 SHT 4 OF 7 REV. SET 4

GM-73

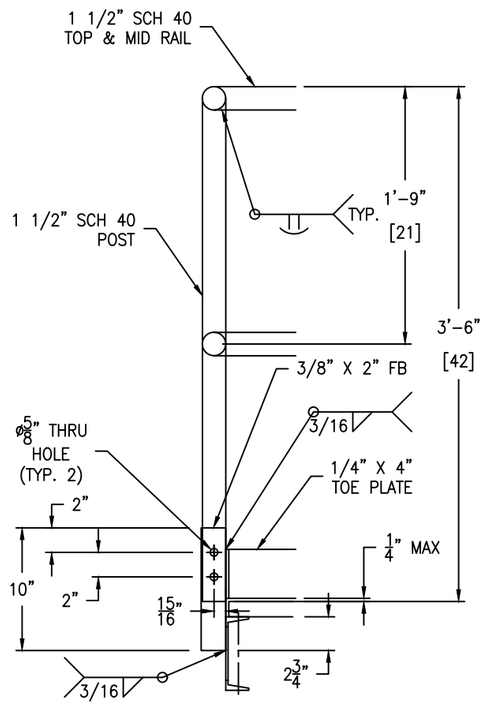

HANDRAIL DETAIL

(8 REQ'D) SCALE: 1 1/2" = 1'-0"

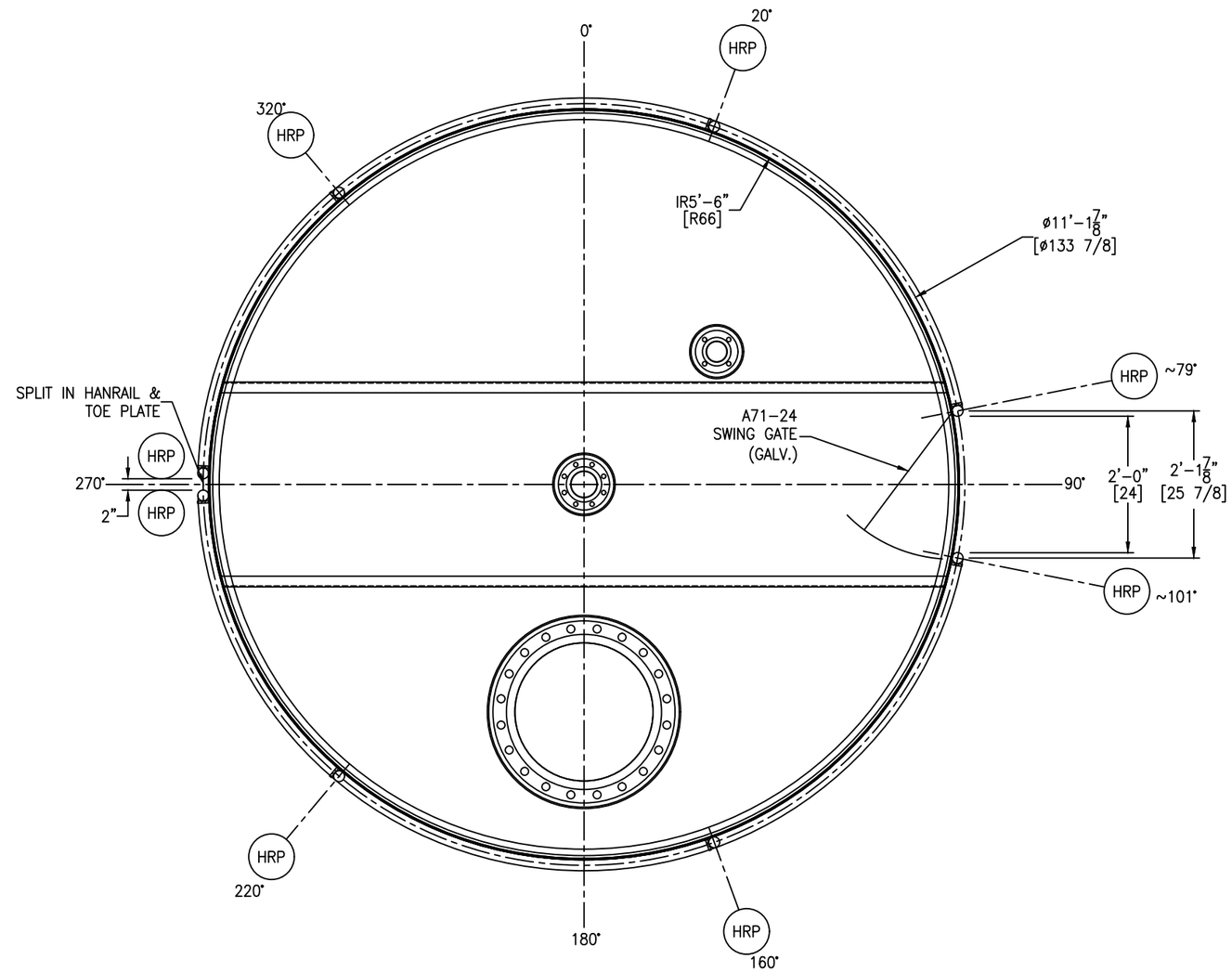

HANDRAIL DETAIL

SCALE: 3/4" = 1'-0"

HANDRAIL BOLTING:
(16) 1/2-13 NC X 3" HH BOLT - SA193-B7 (ZINC PLATED)
(16) 1/2-13 NC HH NUT - SA194-2H (ZINC PLATED)

HANDRAIL TO BE HOT-DIPPED GALVANIZED

REV	D.BY	C.BY	DATE	DESCRIPTION
				AS BUILT
4	RS	NP	11/4/25	CERTIFIED
3	AD	RS	10/29/25	APPROVAL REV 3
2	-	-	-	-
1	-	-	-	-
0	-	-	-	-

⚠ REVISIONS

Savannah Tank & Equipment Corp.
1517 Telfair Road, Savannah, GA 31415
(912) 233-8902

DRAWN BY: AD
CHK'D BY: RS
APPROVED BY: NP
SCALE: 3/8" = 1'-0"

ATLAS MINERALS & CHEMICALS
SULFUR HOLDING TANK
EQUIP. #
CUST. PO # 106053

DRAWING NO.: 084-25-5 SHT 5 OF 7 REV. SET 4

LADDER CLIP BOLTING:
(10) 5/8-11 NC X 2" HH BOLT - SA193-B7 (ZINC PLATED)
(10) 5/8-11 NC HH NUT - SA194-2H (ZINC PLATED)

Fall arrest system:
(1) Top & Bottom Bracket (PART# 6116631)
(1) Cable guide (PART# 6100400)
(1) 25' Cable (PART# 6104025)

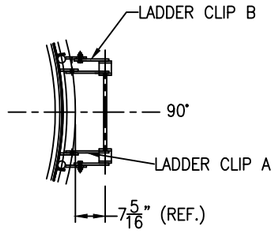

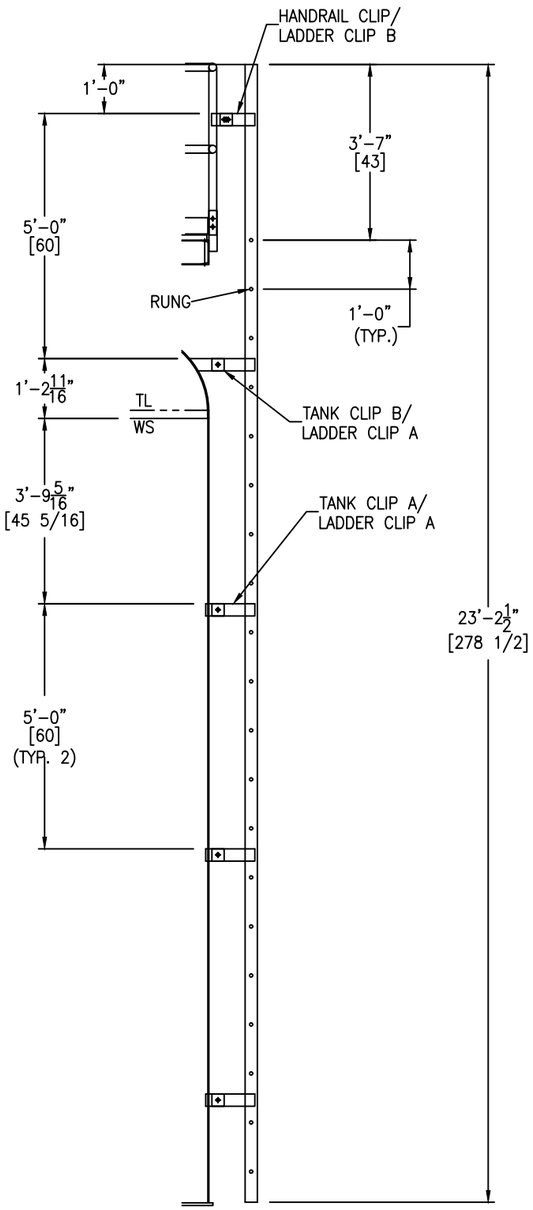

LADDER DETAIL

SCALE: 1/2" = 1'-0"

GM-73

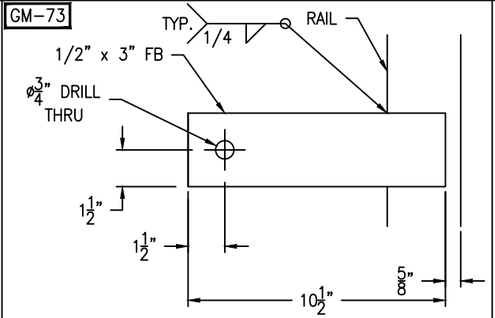

LADDER CLIP A DETAIL

(8 REQ'D) SCALE: 3" = 1'-0"

GM-73

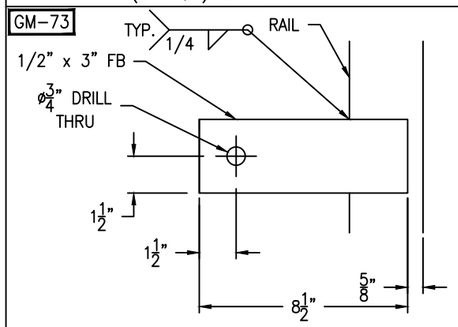

LADDER CLIP B DETAIL

(2 REQ'D) SCALE: 3" = 1'-0"

FC-38

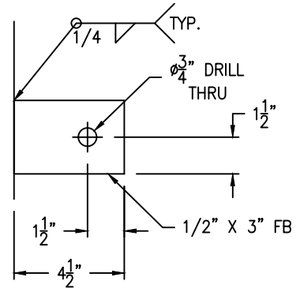

TANK CLIP A DETAIL

(6 REQ'D) SCALE: 3" = 1'-0"

FC-38

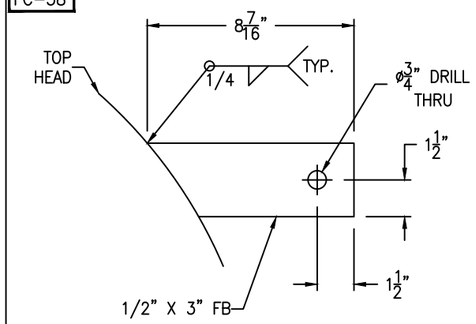

TANK CLIP B DETAIL

(2 REQ'D) SCALE: 3" = 1'-0"

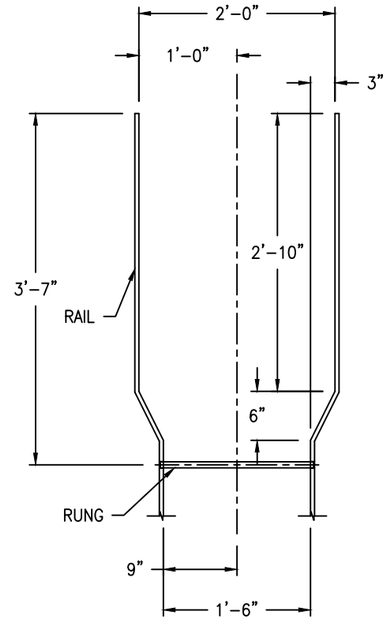

WALK-THRU DETAIL

SCALE: 1" = 1'-0"

GM-73

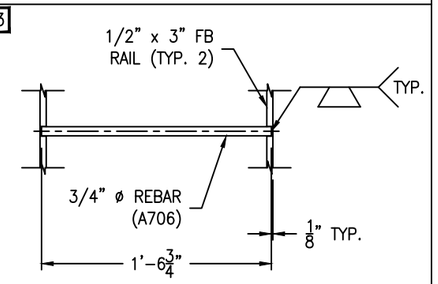

RUNG DETAIL

(20 REQ'D) SCALE: 1 1/2" = 1'-0"

GM-73

*ADJUST LENGTH DURING FABRICATION.

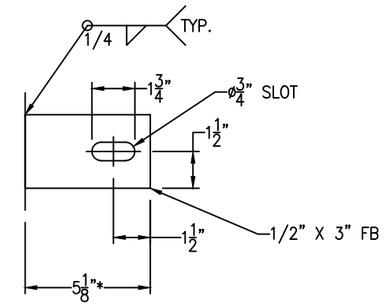

HANDRAIL CLIP DETAIL

(2 REQ'D) SCALE: 3" = 1'-0"

LADDER TO BE HOT-DIPPED GALVANIZED

REV	D.BY	C.BY	DATE	DESCRIPTION
				AS BUILT
4	RS	NP	11/4/25	CERTIFIED
3	AD	RS	10/29/25	APPROVAL REV 3
2	–	–	–	–
1	–	–	–	–
0	–	–	–	–

⚠1 REVISIONS

Savannah Tank & Equipment Corp.
1517 Telfair Road, Savannah, GA 31415
(912) 233-8902

DRAWN BY: AD
CHK'D BY: RS
APPROVED BY: NP
SCALE: 1/4" = 1'-0"

ATLAS MINERALS & CHEMICALS
SULFUR HOLDING TANK
EQUIP. #
CUST. PO # 106053

DRAWING NO.: 084-25-6 SHT 6 OF 7 REV. SET 4

FC-38

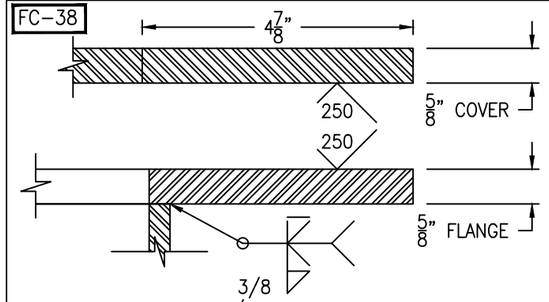

FLANGE/COVER DETAIL

(1 REQ'D) SCALE: 6" = 1'-0"

FC-38

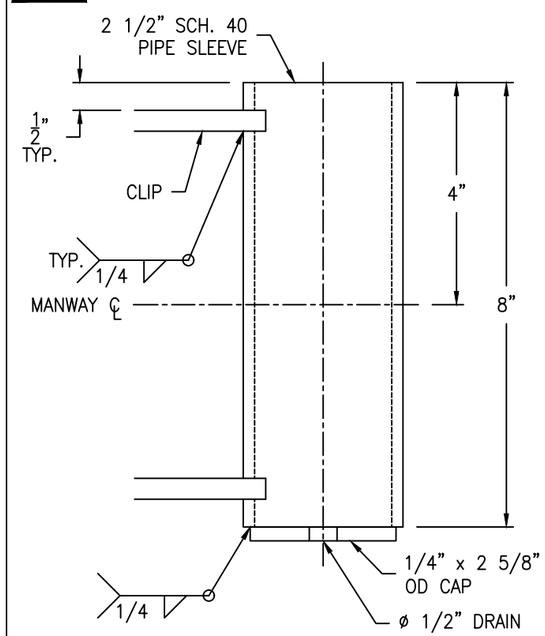

SLEEVE DETAIL

(1 REQ'D) SCALE: 6" = 1'-0"

FC-38

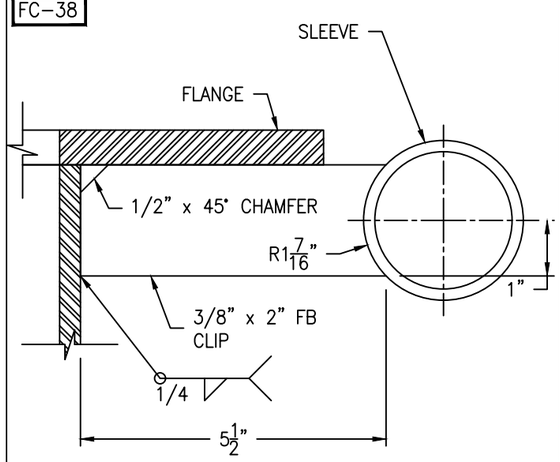

CLIP DETAIL

(2 REQ'D) SCALE: 6" = 1'-0"

FC-38

Bolting for blind
(28) 3/4-10 NC x 2 1/2" HH BOLT
(28) 3/4-10 NC HH NUT
(1) 29 3/8" OD x 24" ID x 1/8" GASKET

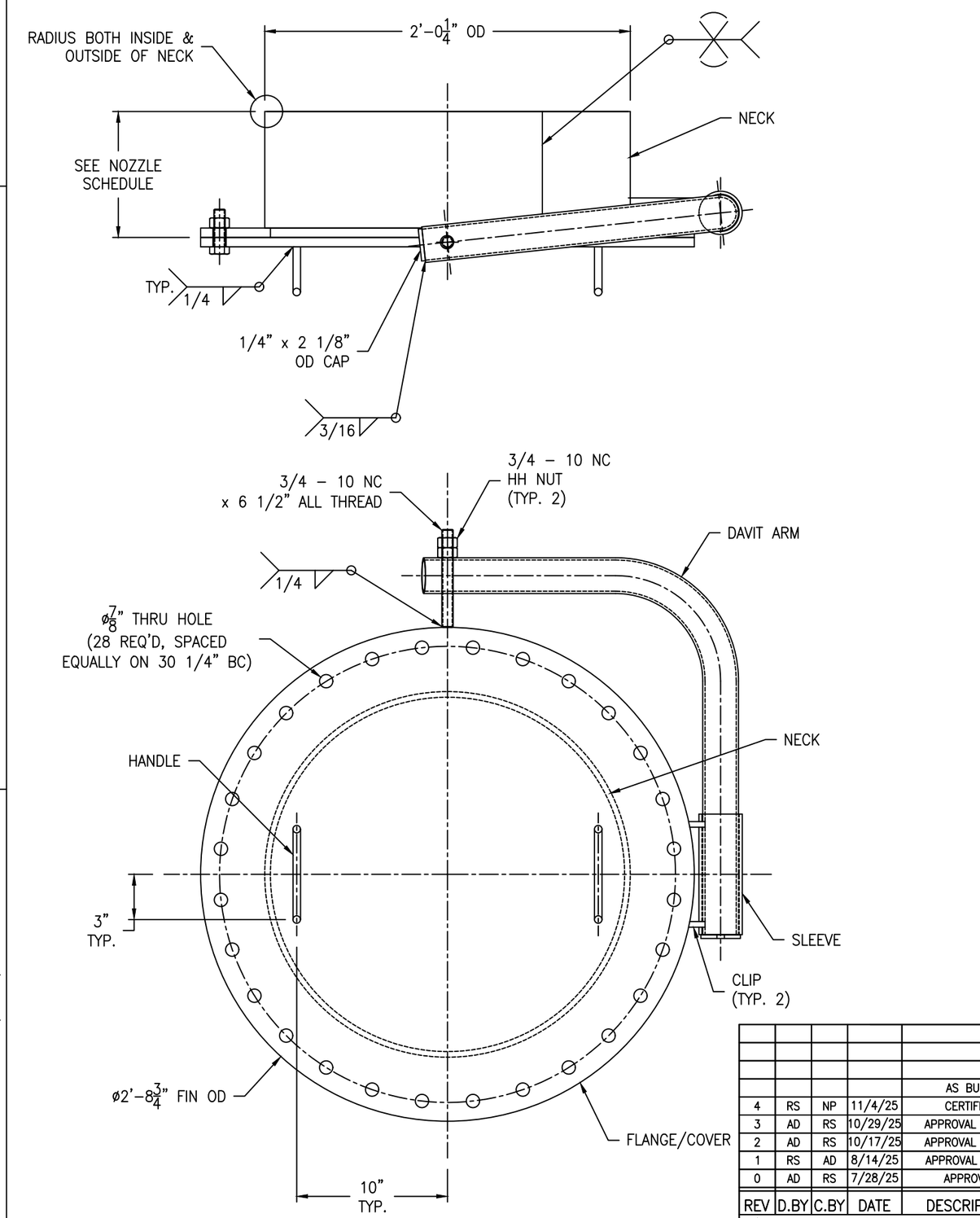

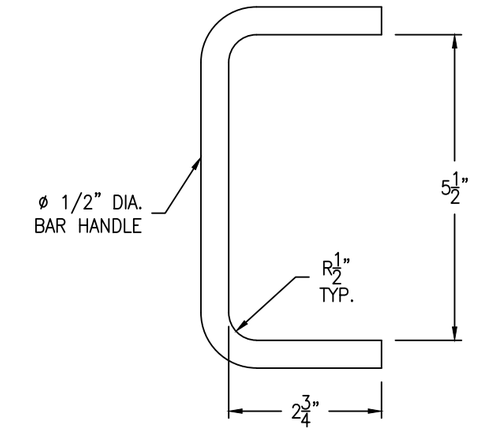

HANDLE DETAIL

(2 REQ'D) SCALE: 6" = 1'-0"

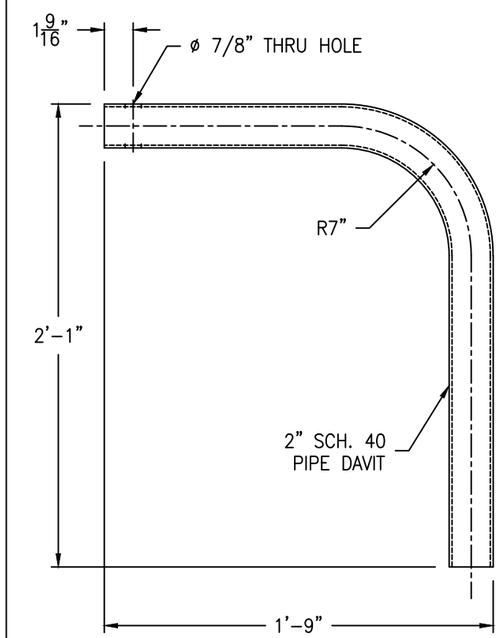

DAVIT ARM DETAIL

(1 REQ'D) SCALE: 2" = 1'-0"

REV	D.BY	C.BY	DATE	DESCRIPTION
				AS BUILT
4	RS	NP	11/4/25	CERTIFIED
3	AD	RS	10/29/25	APPROVAL REV 3
2	AD	RS	10/17/25	APPROVAL REV 2
1	RS	AD	8/14/25	APPROVAL REV 1
0	AD	RS	7/28/25	APPROVAL

⚠1 REVISIONS

Savannah Tank & Equipment Corp.
1517 Telfair Road, Savannah, GA 31415
(912) 233-8902

DRAWN BY: AD
CHK'D BY: RS
APPROVED BY: NP
SCALE: 2" = 1'-0"

ATLAS MINERALS & CHEMICALS
SULFUR HOLDING TANK
EQUIP. #
CUST. PO # 106053

DRAWING NO.: 084-25-7 SHT 7 OF 7 REV. SET 4